PRODUCT STANDARD

Part Number	SP－23BS－D 150Ω×2
Type	Dynamic Speaker (moving coil)

Outer Appearance and Dimensions

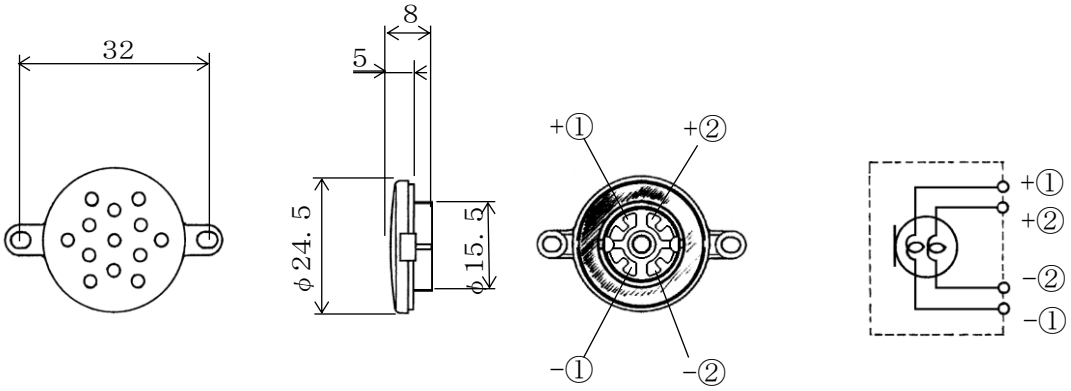

Frequency Response

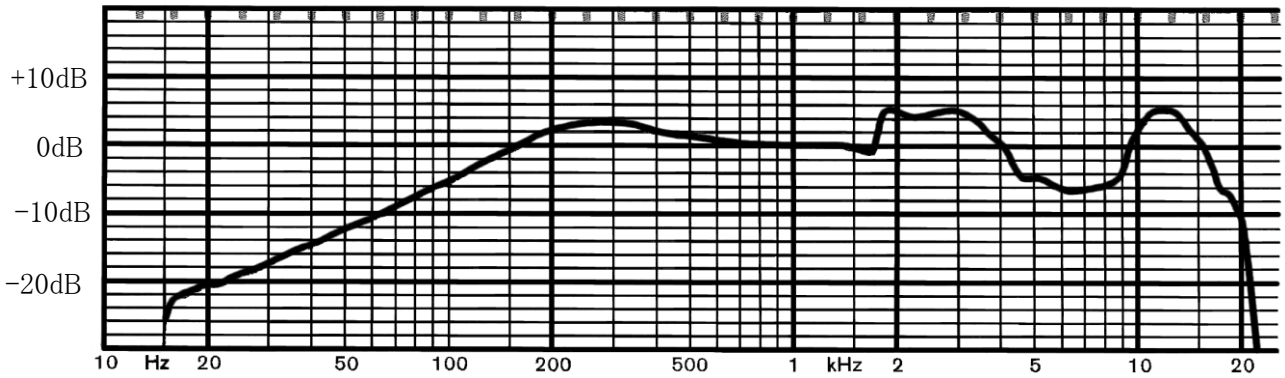

Electrical Specifications

Impedance	150Ω±15% × 2	at 1kHz
Output sound pressure level	93dB±3dB × 2	at 1mW ／ 1kHz
Rated input	30mW	
Maximum allowable input	100mW	
Frequency Range	50～20kHz	
Weight	5g	

Notice

Measuring method	Measurement by B & K population ears 4153. Measurement input 1mW
	Measurement with a dedicated measuring jig. (Φ60mm baffle, half open)
	Diaphragm with protective cover
	Phase marking display terminal side is (+)

			Nov 28 2018	Trigonometry	unit〔mm〕	scale free	No
			MODEL	SP－23BS－D 150Ω×2 SPACIFICATION		Four-Leaf Co. LTD.	